VIA Vika, Norway

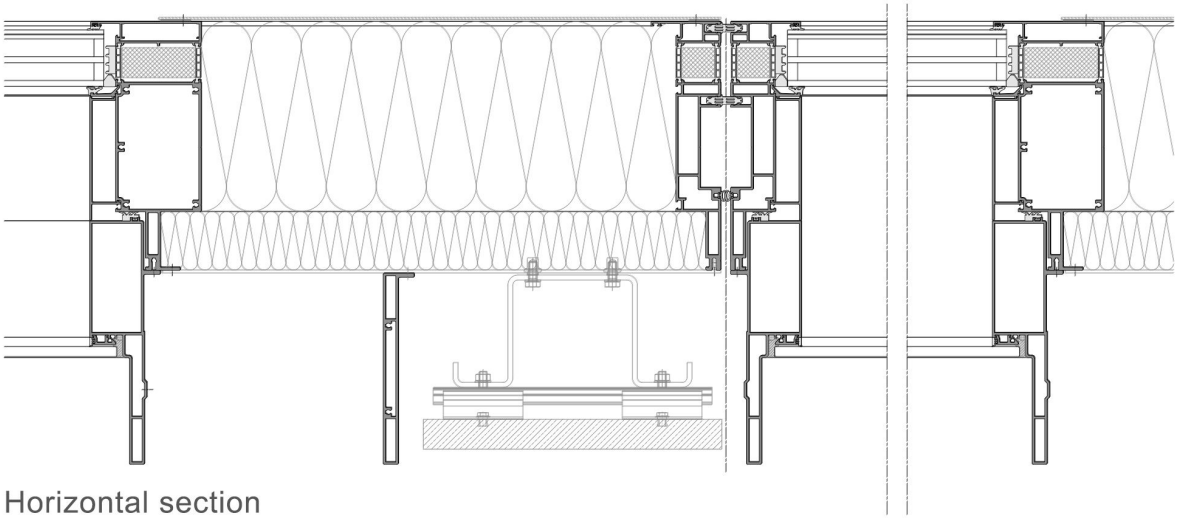

Horizontal section

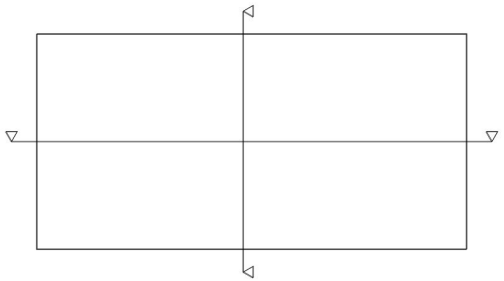

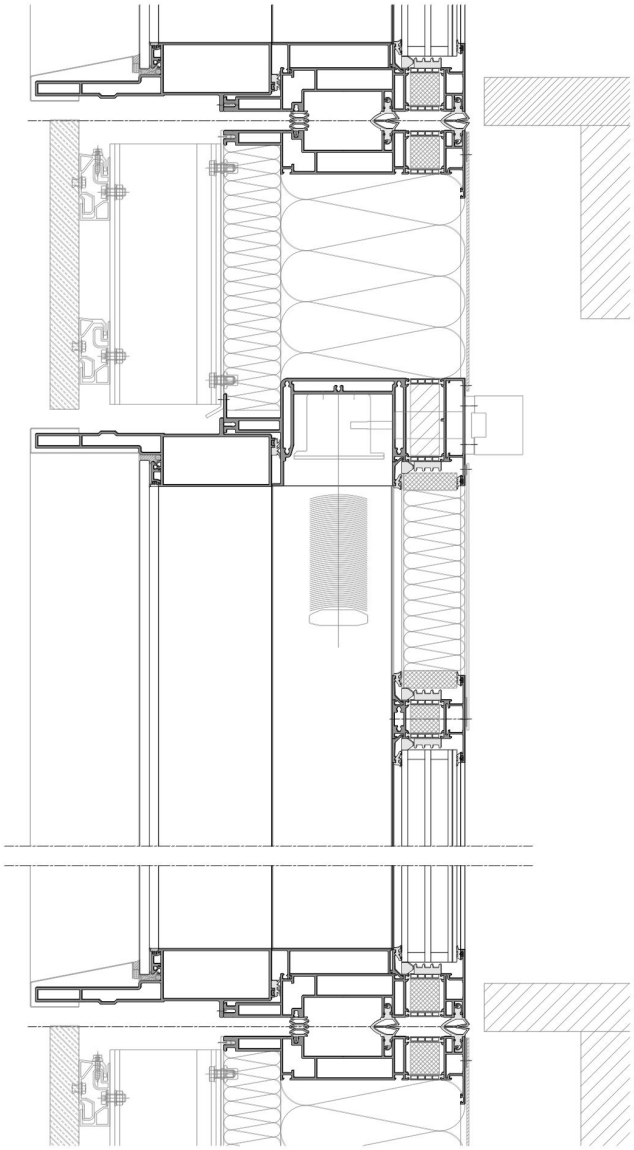

Vertical section

Client	Storebrand Eiendom AS
Architect	Schmidt Hammer Lassen architects
General Contractor	Veidekke Entreprenør ASA
Fabricator	Staticus UAB

Amt für Umwelt und Energie, Switzerland

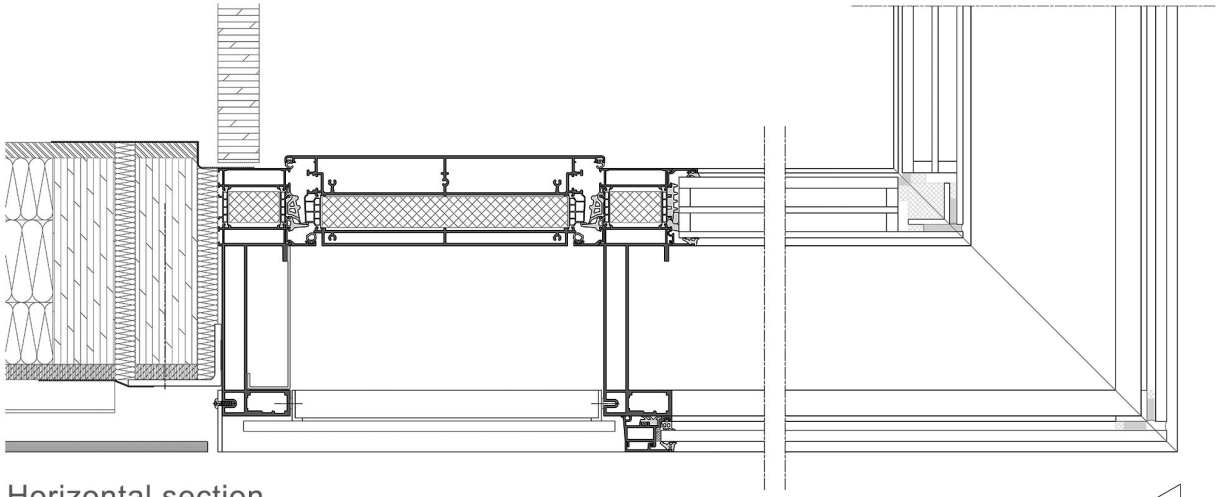

Horizontal section

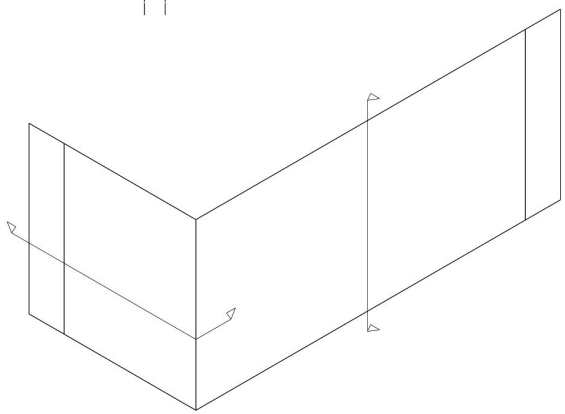

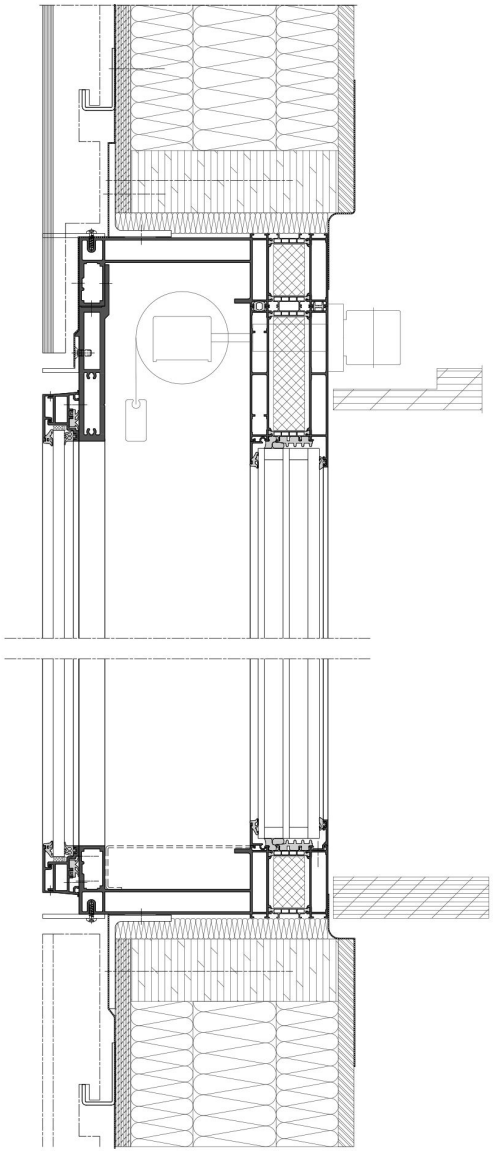

Vertical section

Owner	Immobilien Basel-Stadt
Client	Basel-Stadt Structural Engineering Office
Architect	jessenvollenweider architektur AG
Façade planner	gkp Fassadentechnik AG
Fabricator	Josef Meyer Stahl & Metall AG

Oberstufenschulhaus, Switzerland

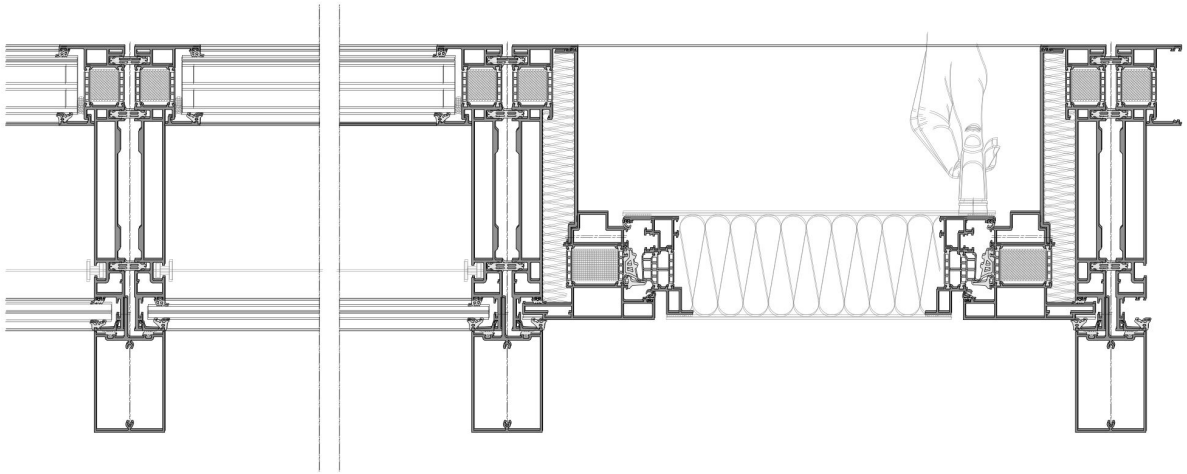

Horizontal section

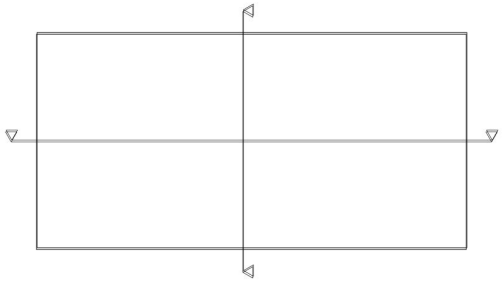

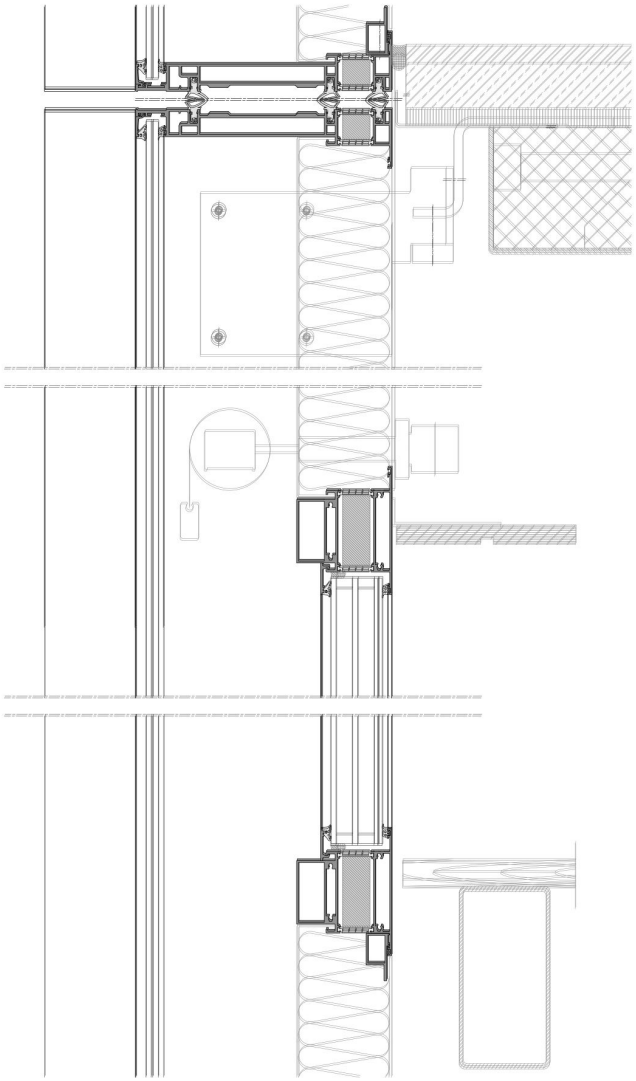

Vertical section

Client	Horw municipality, Canton Lucerne
Architect	Lussi + Partner AG Architekten ETH SIA BSA
Curtain wall designer	gkp fassadentechnik AG
Fabricator	SOTTAS SA

Zweifel Pomy-Chips AG, Switzerland

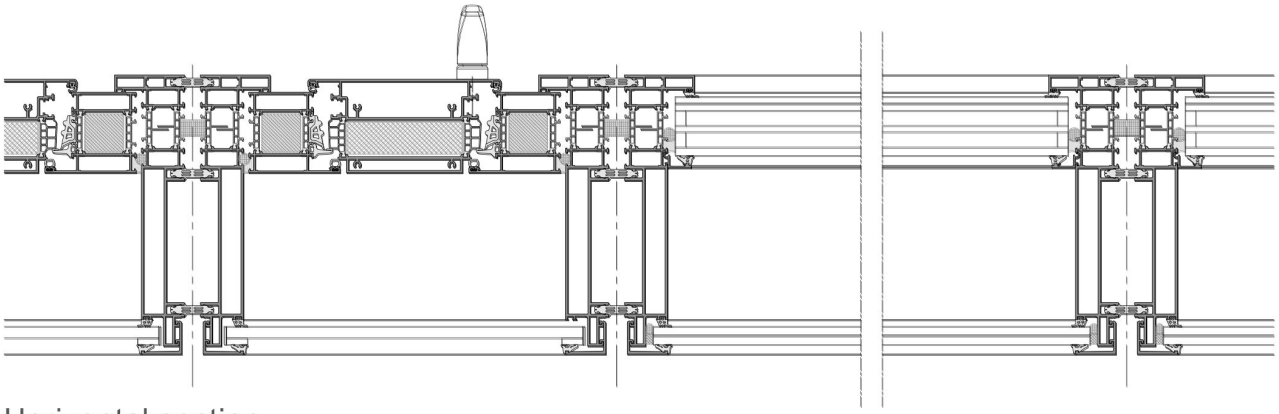

Horizontal section

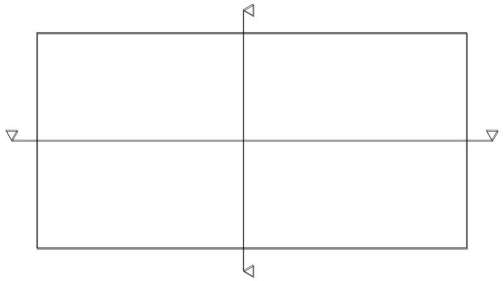

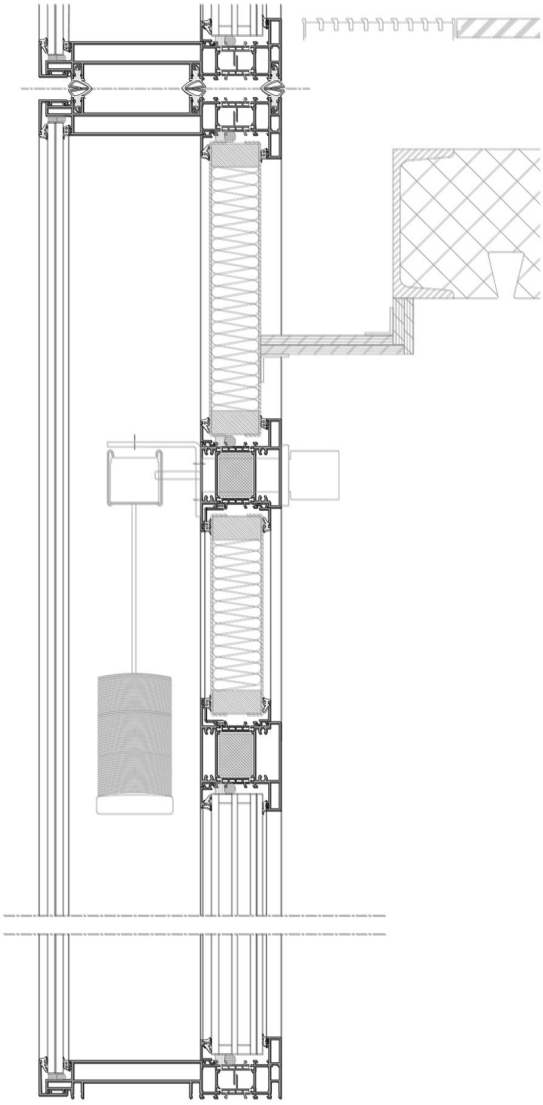

Vertical section

Client	Zweifel Pomy-Chips AG
Architect	ZSB Architekten SIA AG
Curtain wall designer	Mebatech AG
Fabricator	Josef Meyer Stahl und Metall AG